CSE 311- Data Communication

Amplitude Modulation

Md Asib Rahman
Adjunct Lecturer
Dept of Computer Science and Engineering
Bangladesh University of Engineering and Technology

Recap

- Fourier Transform Properties - https://en.wikibooks.org/wiki/Engineering_Tables/Fourier_Transform_Properties
- Fourier Transform Table - https://en.wikibooks.org/wiki/Engineering_Tables/Fourier_Transform_Table
- Fourier Transform Table - https://en.wikibooks.org/wiki/Engineering_Tables/Fourier_Transform_Table_2
- Intuitive Explanation of Fourier Series - https://www.desmos.com/calculator/vjolrybqdt
-

Outline

- **Introduction to Modulation**
- Double Sideband Suppressed Carrier Amplitude Modulation (DSB-SC)
- Modulators
- Demodulators
- Single Sideband Modulation (SSB)
- Quadrature Amplitude Modulation (QAM)
- Vestigial Sideband (VSB)
- Frequency Division Multiplexing (FDM)
- Phase Locked Loop (PLL)

Transmission - Naive approach

- Send a message directly transmitter to receiver
- Also known as **Baseband Communication**
  - **Baseband** refers to the frequency band of the original message signal.
  - As original signal is transmitted without any change, it is known as baseband communication.

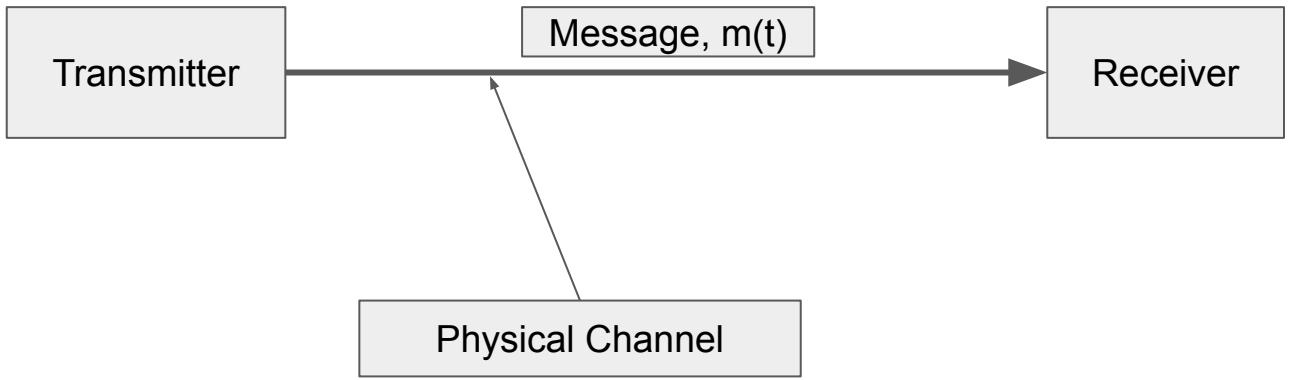

Transmission - Naive approach

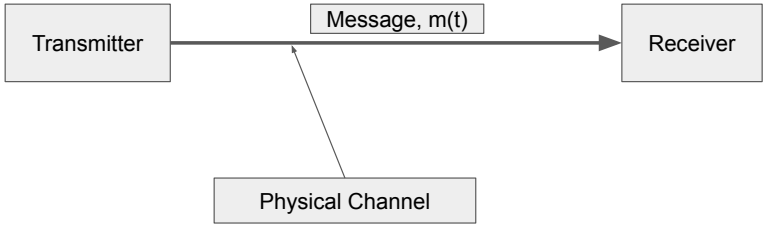

- Send a message directly transmitter to receiver
- Problems
  - **Interference** : Most signals lies on 0 to x KHz (for audio, x=3.5, for video, x=4.3). We cannot send multiple signals through the same medium as they will interfere with each other.
  - **Efficiency**: As only one signal can be transmitted, most of the channel bandwidth is wasted.
  - **Medium:** As signals contain significant low-frequency content, it cannot be transmitted over wireless channels. Coaxial cable or twisted pair cables are required.

Solution - Modulation

- Moves the message signal into a target frequency band.
- Target frequency band is known as carrier frequency,
- Carrier frequency carries the message to receiver.
- This form of communication is known as **Carrier Communication**.

Solution - Modulation

- Moves the message signal into a specific frequency band.
- As we are dealing with frequency, it is easier to visualize in frequency domain.

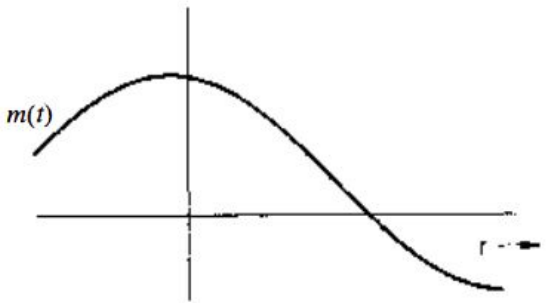

Time Domain

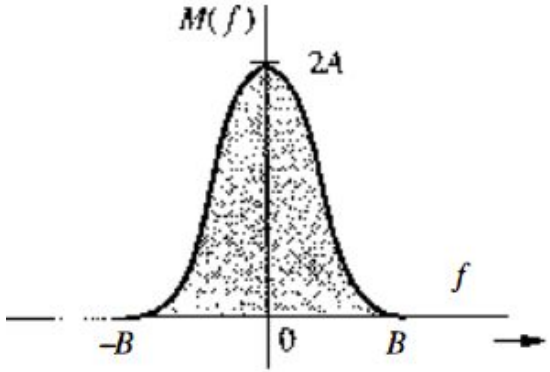

Frequency Domain

Solution - Modulation

- Moves the message signal into a specific frequency band.
- Original signal centered at 0 Hz, is shifted to signal at f_c Hz.
- C in f_c denotes carrier,

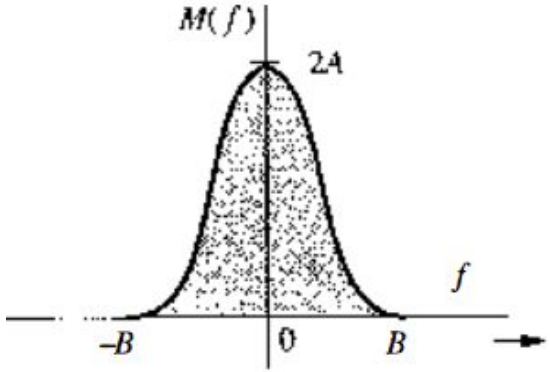

Frequency Domain

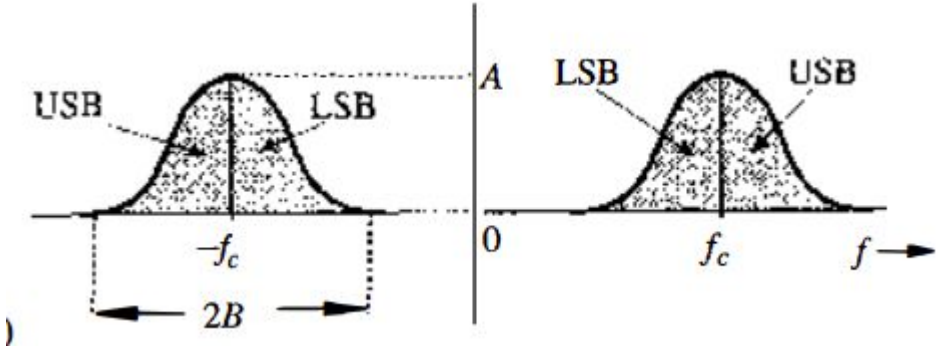

Message shifted to fc Hz

Message

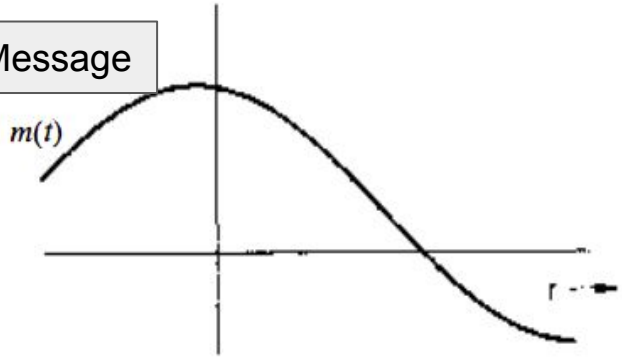

(b)

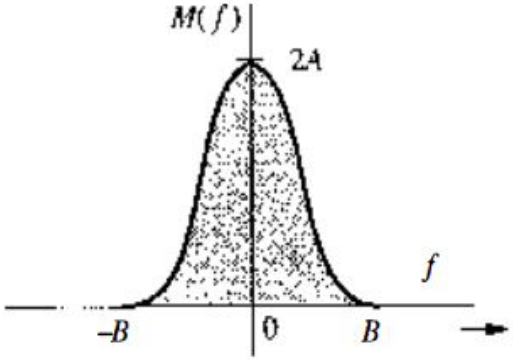

Message in Frequency domain

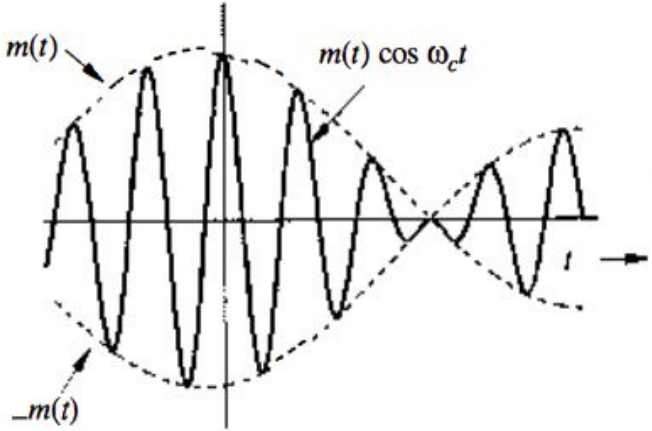

(c)

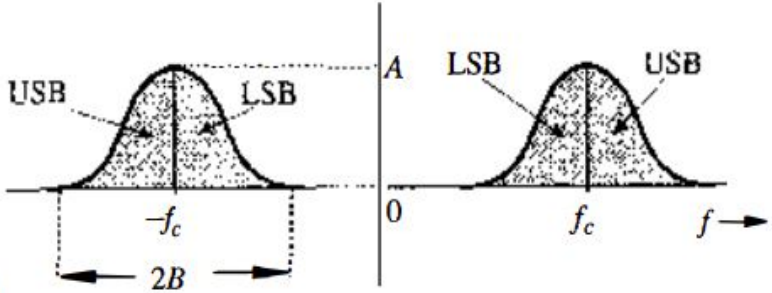

Modulated Message in Frequency domain

Modulated Message in Time domain

Modulation - Advantage

Problem:

Interference : Most signals lies on 0 to x KHz (for audio, x=3.5, for video, x=4.3). We cannot send multiple signals through the same medium as they will interfere with each other.

Solution:

We can shift signal at different frequencies to ensure they cannot interfere at each other.

Normally, multiple signals are modulated side by side with guard band in middle. Guard band keeps extra space at middle to ensure no interference.

Modulation - Advantage

Problem:

Efficiency: As only one signal can be transmitted, most of the channel bandwidth is wasted.

Solution:

We can modulate multiple signals to ensure the full channel bandwidth is used.

Modulation - Advantage

Problem:

Medium: As signals contain significant low-frequency content, it cannot be transmitted over wireless channels. Coaxial cable or twisted pair cables are required.

Solution:

We can modulate to higher frequencies. Higher frequencies can be transmitted efficiently by wireless channels.

Types of Modulation

There are 3 properties of Carrier wave (Amplitude, Frequency and Phase). We can encode m(t) by changing one of this properties proportional to message keeping the other 3 properties constant. Thus there are 3 types of modulations:

1. Amplitude modulation
2. Frequency modulation
3. Phase modulation

Frequency and phase modulation is also known as Angle modulation.

Types of Modulation

Consider a carrier sinusoidal wave:

$$s(t) = A(t)\cos\left[\omega_c t + \phi(t)\right]$$

1. Amplitude modulation - change A(t) linearly with m(t)
2. Frequency modulation - change frequency linearly with m(t)
3. Phase modulation - change phase linearly with m(t)

Outline

- Introduction to Modulation
- **Double Sideband Suppressed Carrier Amplitude Modulation (DSB-SC)**
- Modulators
- Demodulators
- Single Sideband Modulation (SSB)
- Quadrature Amplitude Modulation (QAM)
- Vestigial Sideband (VSB)
- Frequency Division Multiplexing (FDM)
- Phase Locked Loop (PLL)

DSB-SC Modulation

Without loss of generality, phase of carrier wave = 0.

For amplitude modulation, we replace A(t) with m(t).

We need to multiply m(t) with sinusoid.

$$m(t) \Longleftrightarrow M(f)$$

then

$$m(t)\cos 2\pi f_c t \Longleftrightarrow \tfrac{1}{2}[M(f+f_c)+M(f-f_c)] \tag{4.1}$$

Message

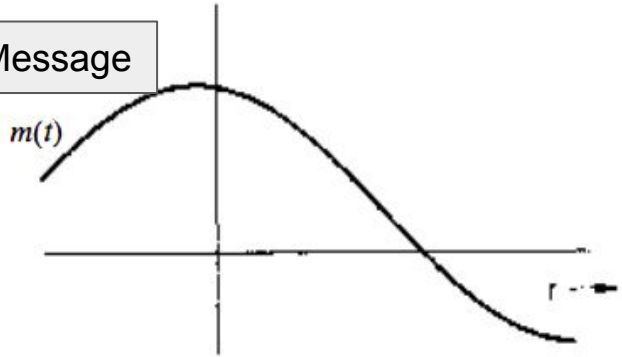

(b)

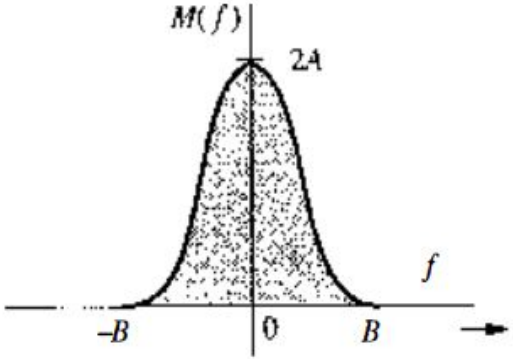

Message in Frequency domain

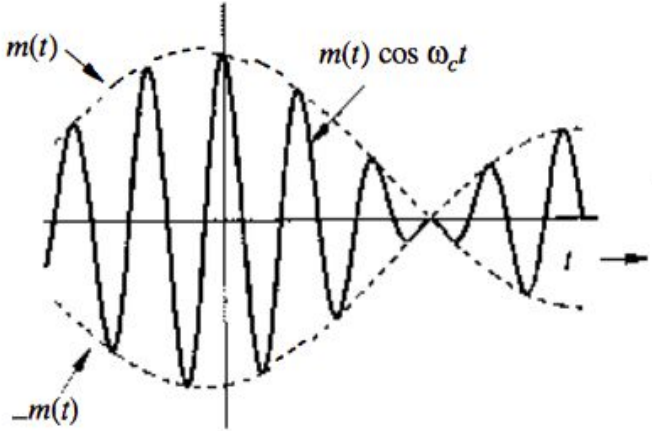

(c)

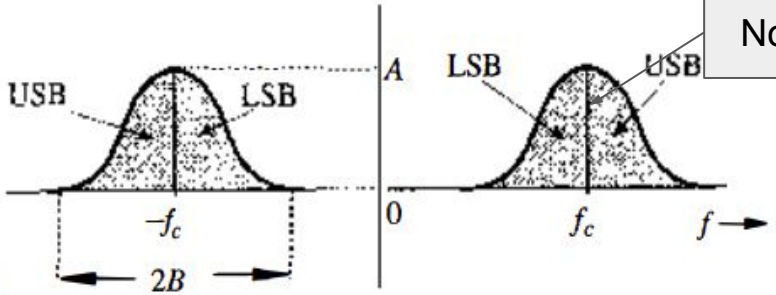

No carrier

Modulated Message in Frequency domain

Modulated Message in Time domain

DSB-SC Demodulation

We need to multiply the received signal by carrier sinusoid.

$$e(t) = m(t)\cos^2 \omega_c t$$
$$= \frac{1}{2}[m(t) + m(t)\cos\ 2\omega_c t]$$

$$E(f) = \frac{1}{2}M(f) + \frac{1}{4}[M(f + 2f_c) + M(f - 2f_c)]$$

Mathematical Example

For a baseband signal

$$m(t) = \cos\ \omega_m t = \cos\ 2\pi f_m t,$$

find the DSB-SC signal, and sketch its spectrum. Identify the USB and LSB. Verify that the DSB-SC modulated signal can be demodulated by the demodulator in Fig. 4.1e.

Outline

- Introduction to Modulation
- Double Sideband Suppressed Carrier Amplitude Modulation (DSB-SC)
- **Modulators**
- Demodulators
- Single Sideband Modulation (SSB)
- Quadrature Amplitude Modulation (QAM)
- Vestigial Sideband (VSB)
- Frequency Division Multiplexing (FDM)
- Phase Locked Loop (PLL)

Modulators

Modulation is multiplying the message with carrier. Some important categories:

1. Multiplier Modulators
2. Nonlinear Modulators
3. Switching Modulators

Multiplier Modulators

Multiplier Modulators: Here modulation is achieved directly by multiplying $m(t)$ with $\cos\ \omega_c t$, using an analog multiplier whose output is proportional to the product of two input signals. Typically, such a multiplier may be obtained from a variable-gain amplifier in which the gain parameter (such as the β of a transistor) is controlled by one of the signals, say, $m(t)$. When the signal $\cos\ \omega_c t$ is applied at the input of this amplifier, the output is proportional to $m(t)\cos\ \omega_c t$.

Problem: Multiplication of two signals over a sizable dynamic range was a challenge to circuit designers previously. Now this problem is solved due to advanced semiconductor technologies.

Nonlinear Modulators

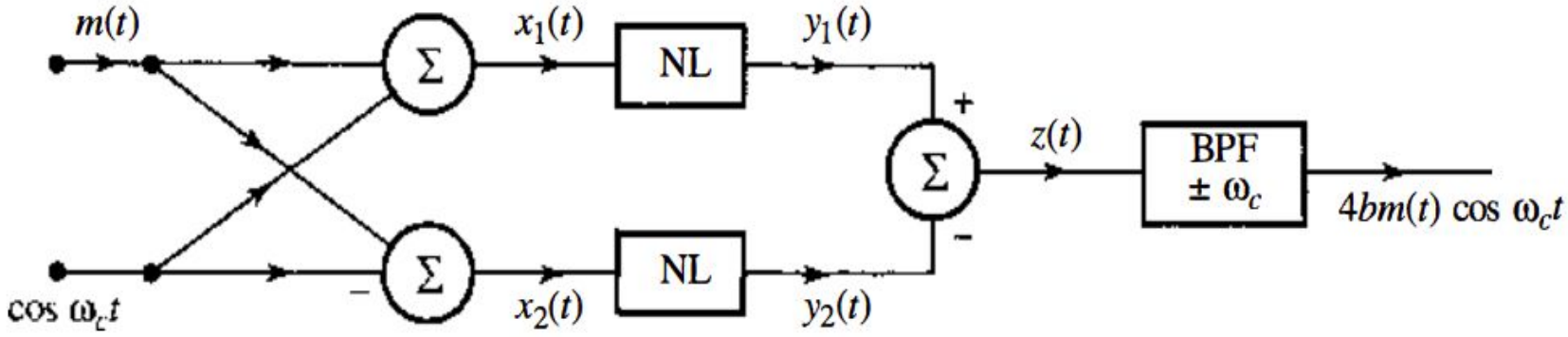

Nonlinear Modulators

Let the input-output characteristics of either of the nonlinear elements be approximated by a power series

$$y(t) = ax(t) + bx^2(t) \tag{4.3}$$

where $x(t)$ and $y(t)$ are the input and the output, respectively, of the nonlinear element. The summer output $z(t)$ in Fig. 4.3 is given by

$$z(t) = y_1(t) - y_2(t) = [ax_1(t) + b{x_1}^2(t)] - [ax_2(t) + b{x_2}^2(t)]$$

Substituting the two inputs $x_1(t) = \cos\ \omega_c t + m(t)$ and $x_2(t) = \cos\ \omega_c t - m(t)$ in this equation yields

$$z(t) = 2a \cdot m(t) + 4b \cdot m(t) \cos\ \omega_c t$$

Switching Modulators

See class notes

Example 2.4 Find the exponential Fourier series for the periodic square wave $w(t)$ shown in Fig. 2.16.

Figure 2.16
A square pulse periodic signal.

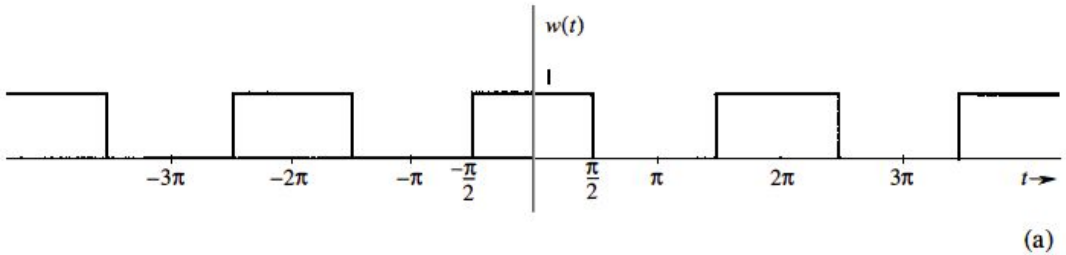

(a)

$$w(t) = \sum_{n=-\infty}^{\infty} D_n e^{jn2\pi f_0 t}$$

where

$$D_0 = \frac{1}{T_0}\int_{T_0} w(t)\,dt = \frac{1}{2}$$

$$D_n = \frac{1}{T_0}\int_{T_0} w(t)e^{-jn2\pi f_0 t}\,dt, \qquad n \neq 0$$

$$= \frac{1}{T_0}\int_{-T_0/4}^{T_0/4} e^{-jn2\pi f_0 t}\,dt$$

$$= \frac{1}{-jn2\pi f_0 T_0}\left[e^{-jn2\pi f_0 T_0/4} - e^{jn2\pi f_0 T_0/4}\right]$$

$$= \frac{2}{n2\pi f_0 T_0}\sin\left(\frac{n2\pi f_0 T_0}{4}\right) = \frac{1}{n\pi}\sin\left(\frac{n\pi}{2}\right)$$

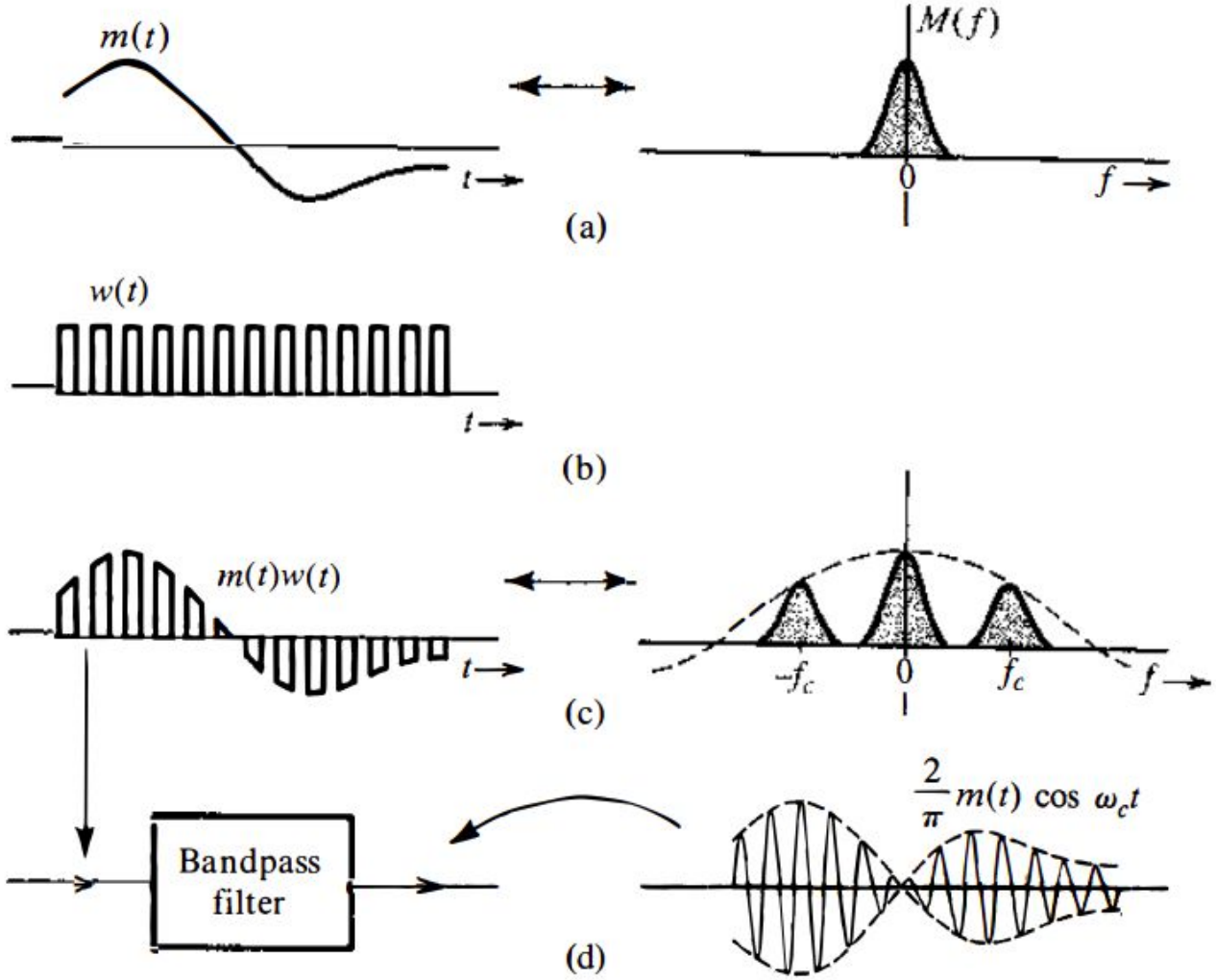
m(t)
t
M(f)
0
f
(a)
w(t)
t
(b)
m(t)w(t)
t
-f_c
0
f_c
f
(c)
Bandpass filter
2/π m(t) cos ω_c t
(d)

Figure 4.5
(a) Diode-bridge electronic switch.
(b) Series-bridge diode modulator.
(c) Shunt-bridge diode modulator.

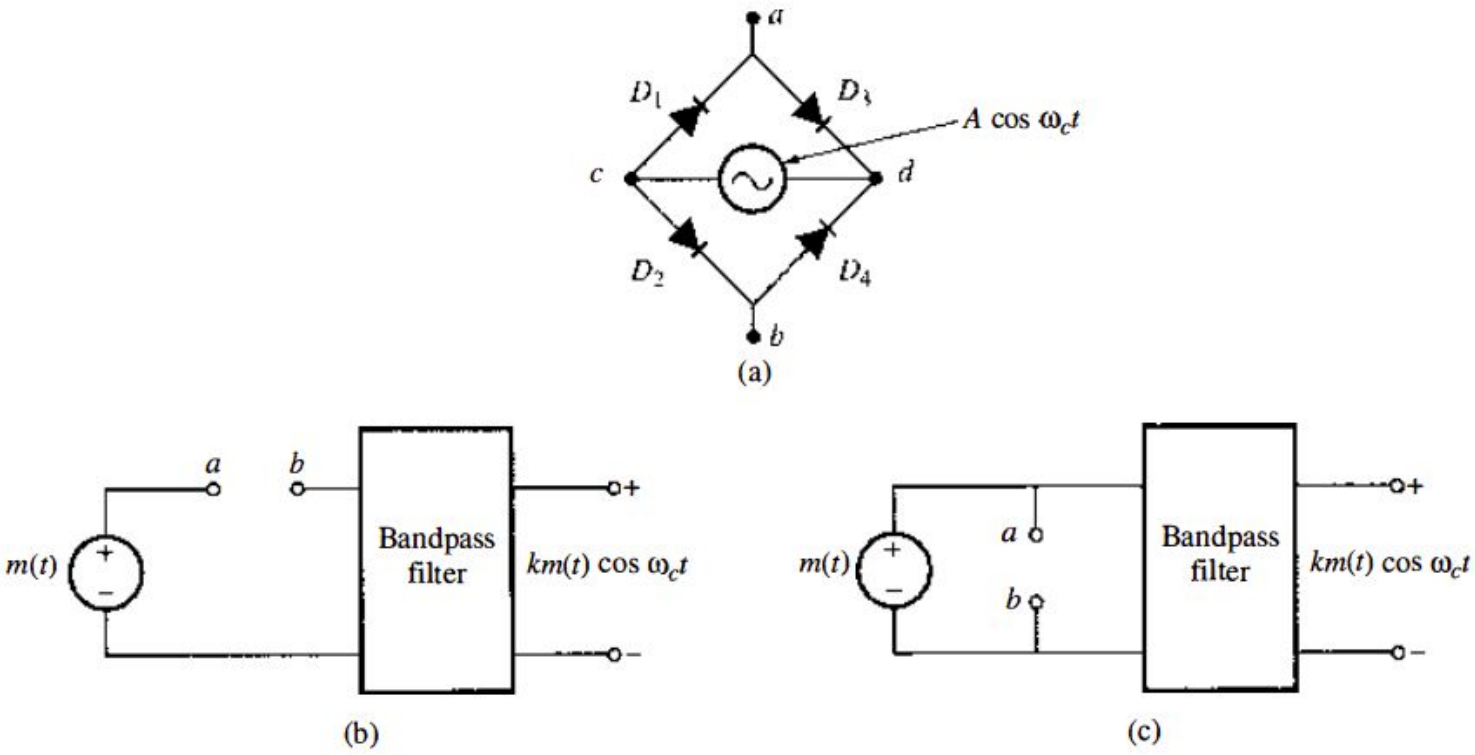

Figure 4.6
Ring modulator.

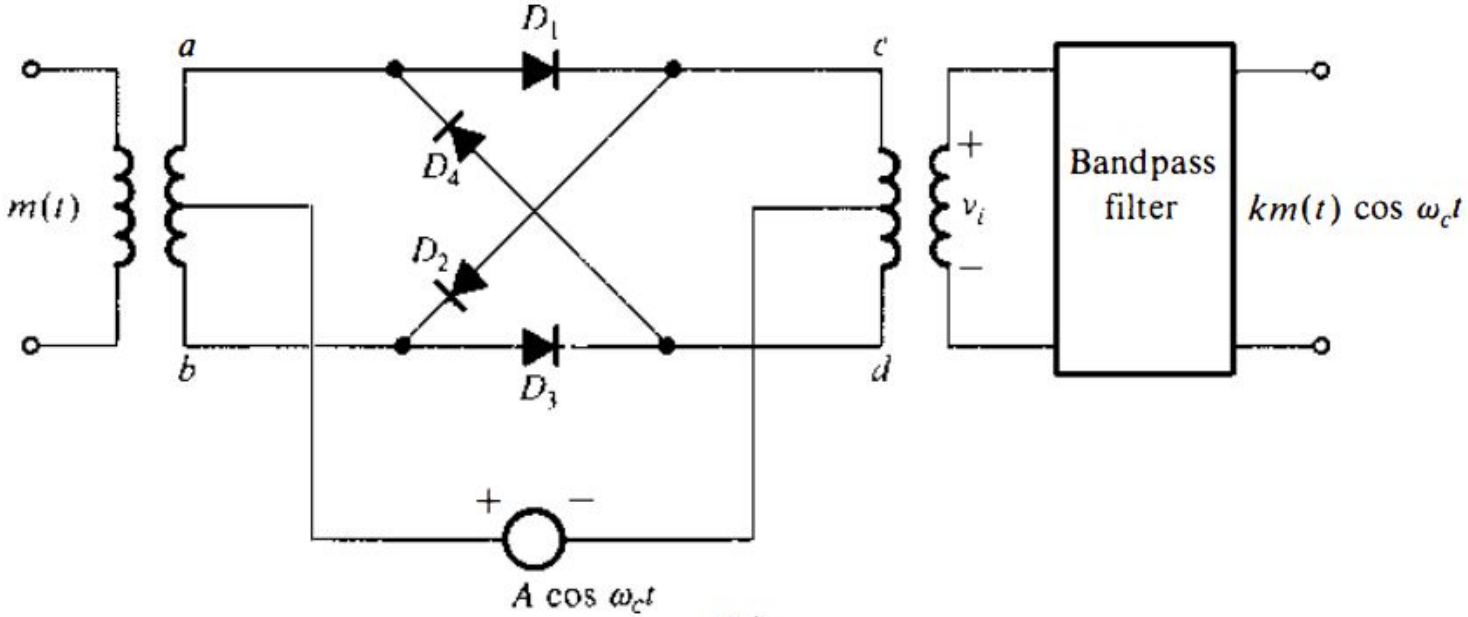

(a)

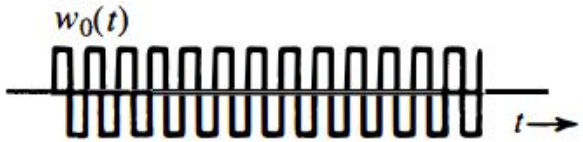

(b)

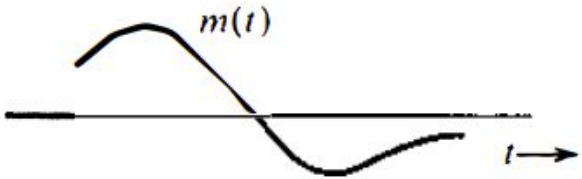

(c)

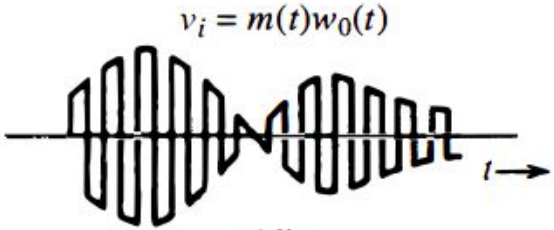

(d)

Outline

- Introduction to Modulation
- Double Sideband Suppressed Carrier Amplitude Modulation (DSB-SC)
- Modulators
- **Demodulators and Amplitude Modulation**
- Single Sideband Modulation (SSB)
- Quadrature Amplitude Modulation (QAM)
- Vestigial Sideband (VSB)
- Frequency Division Multiplexing (FDM)
- Phase Locked Loop (PLL)

Demodulator

- We can use the same circuits for demodulation
- Difference between modulation and demodulation circuits is **output filter.**
- But for demodulation, the receiver must generate a carrier in phase and frequency synchronism with the incoming carrier. These demodulators are synonymously called **synchronous** or **coherent** (also homodyne) demodulators.
- But it is hard to generate carrier in phase

Demodulators

- The modulated signal undergoes change while travelling through medium, making it harder to regenerate carrier.

$$r(t) = A_c m(t - t_0) \cos\left[(\omega_c + \Delta\omega)(t - t_0)\right] = A_c m(t - t_0) \cos\left[(\omega_c + \Delta\omega)t - \theta_d)\right]$$

Transmitter Receiver Tradeoff

- We can build synchronous receiver with higher cost.
- In broadcast setting this approach is highly inefficient. It is better to shift the complexity to transmitter side.
- For this reason, AM is preferred over synchronous detection

Amplitude Modulation

- One solution is to send the carrier wave along with DSB-SC signal.

$$\varphi_{\mathrm{AM}}(t) = A\cos\ \omega_c t + m(t)\cos\ \omega_c t \tag{4.8a}$$

$$= [A + m(t)]\cos\ \omega_c t \tag{4.8b}$$

The spectrum of $\varphi_{\mathrm{AM}}(t)$ is basically the same as that of $\varphi_{\mathrm{DSB-SC}}(t) = m(t)\cos\ \omega_c t$ except for the two additional impulses at $\pm f_c$,

$$\varphi_{\mathrm{AM}}(t) \iff \frac{1}{2}[M(f+f_c) + M(f-f_c)] + \frac{A}{2}[\delta(f+f_c) + \delta(f-f_c)] \tag{4.8c}$$

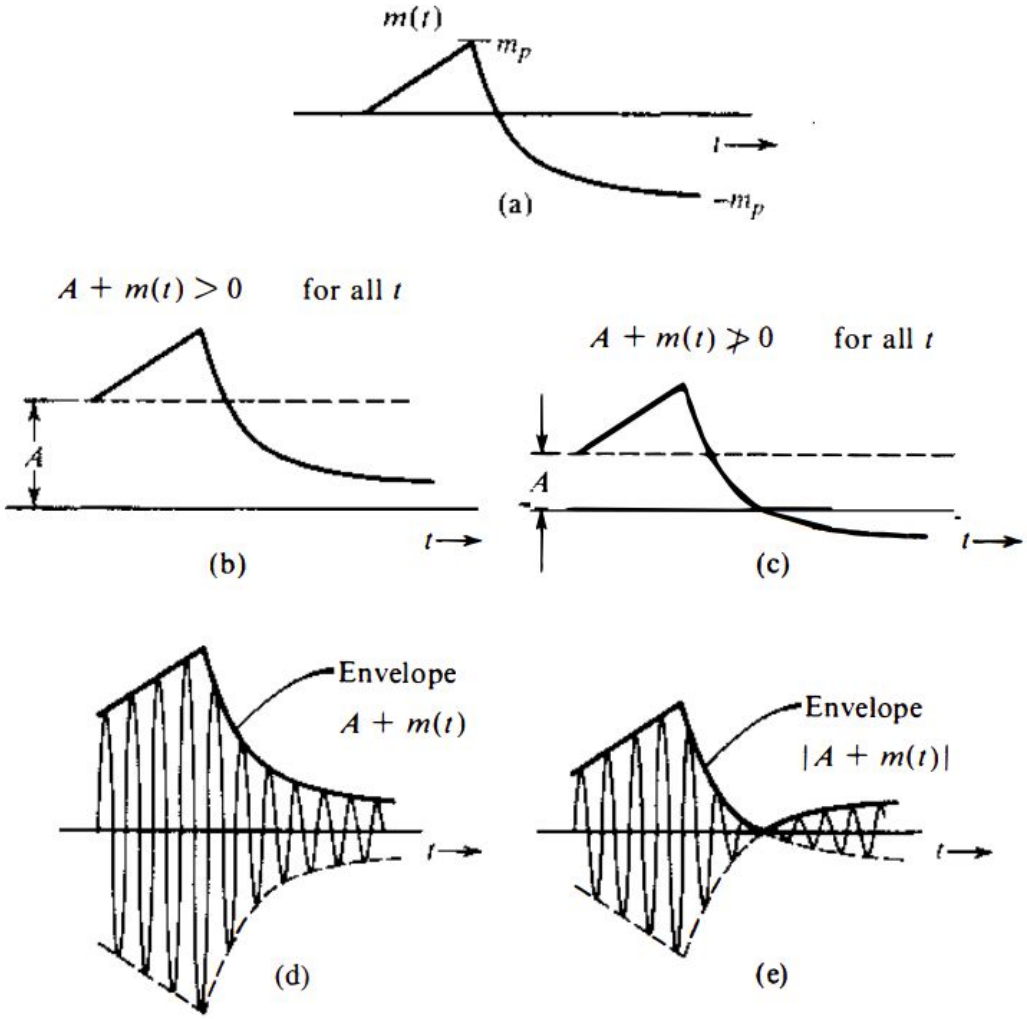
m(t)
m_p
t
(a)
-m_p
A + m(t) > 0 for all t
A
t
(b)
A + m(t) ≯ 0 for all t
A
t
(c)
Envelope
A + m(t)
t
(d)
Envelope
|A + m(t)|
t
(e)

Envelope

Let us now be more precise about the definition of "envelope." Consider a signal $E(t)\cos\omega_c t$. If $E(t)$ varies slowly in comparison with the sinusoidal carrier $\cos\omega_c t$, then the **envelope** of $E(t)\cos\omega_c t$ is $|E(t)|$. This means [see Eq. (4.8b)] that if and only if $A + m(t) \geq 0$ for all t, the envelope of $\varphi_{\mathrm{AM}}(t)$ is

$$|A + m(t)| = A + m(t)$$

In other words, for envelope detection to properly detect $m(t)$, two conditions must be met:

(a) $f_c \gg$ bandwidth of $m(t)$

(b) $A + m(t) \geq 0$

Modulation Index

- Symmetric, m_p = m_max

$$\mu = \frac{m_p}{A}$$

- Not symmetric

$$\mu = \frac{m_{\max} - m_{\min}}{2A + m_{\max} + m_{\min}}$$

- Condition For distortionless detection

$$0 \leq \mu \leq 1$$

Example

- Tone modulation for different modulation index

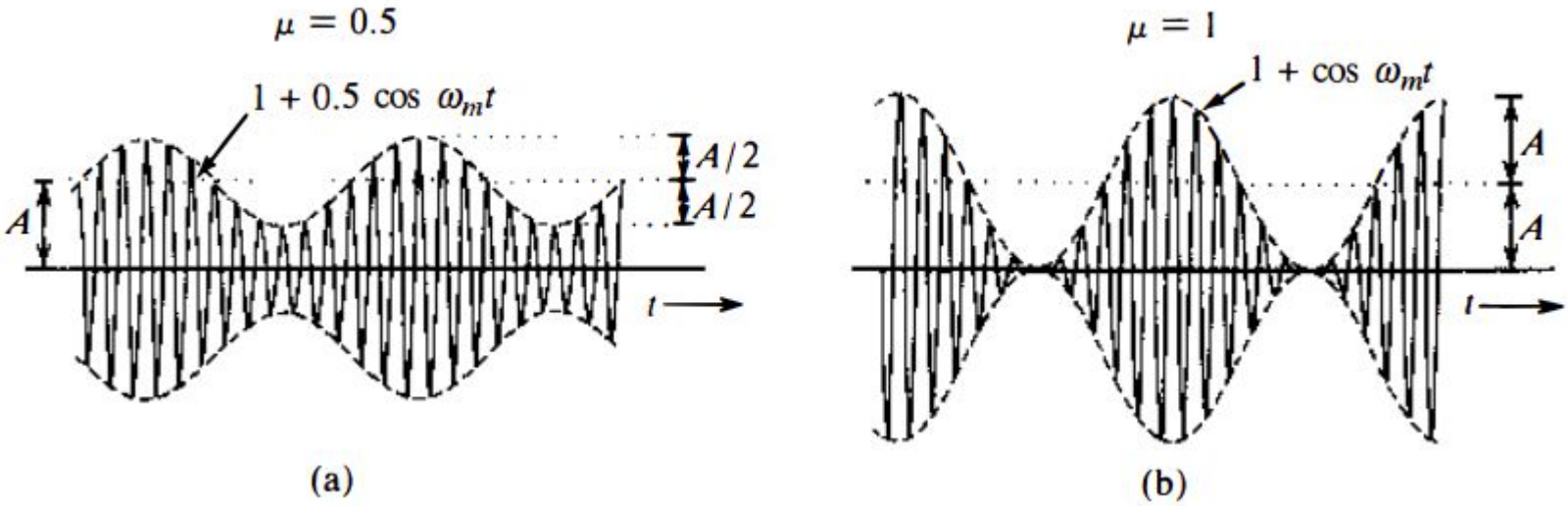

Power efficiency

- This approach is not efficient in power.
- Here, P_s = signal power, P_c = carrier power

$$\eta = \frac{\text{useful power}}{\text{total power}} = \frac{P_s}{P_c + P_s}$$

Example

Determine η and the percentage of the total power carried by the sidebands of the AM wave for tone modulation when $\mu = 0.5$ and when $\mu = 0.3$.

For $\mu = 0.5$,

$$\eta = \frac{\mu^2}{2 + \mu^2} 100\% = \frac{(0.5)^2}{2 + (0.5)^2} 100\% = 11.11\%$$

Hence, only about 11% of the total power is in the sidebands. For $\mu = 0.3$,

$$\eta = \frac{(0.3)^2}{2 + (0.3)^2} 100\% = 4.3\%$$

Hence, only 4.3% of the total power is in the sidebands that contain the message signal.

Demodulation of AM

- Two types
  - Rectifier Detector
  - Envelope Detector

Figure 4.10
Rectifier detector for AM.

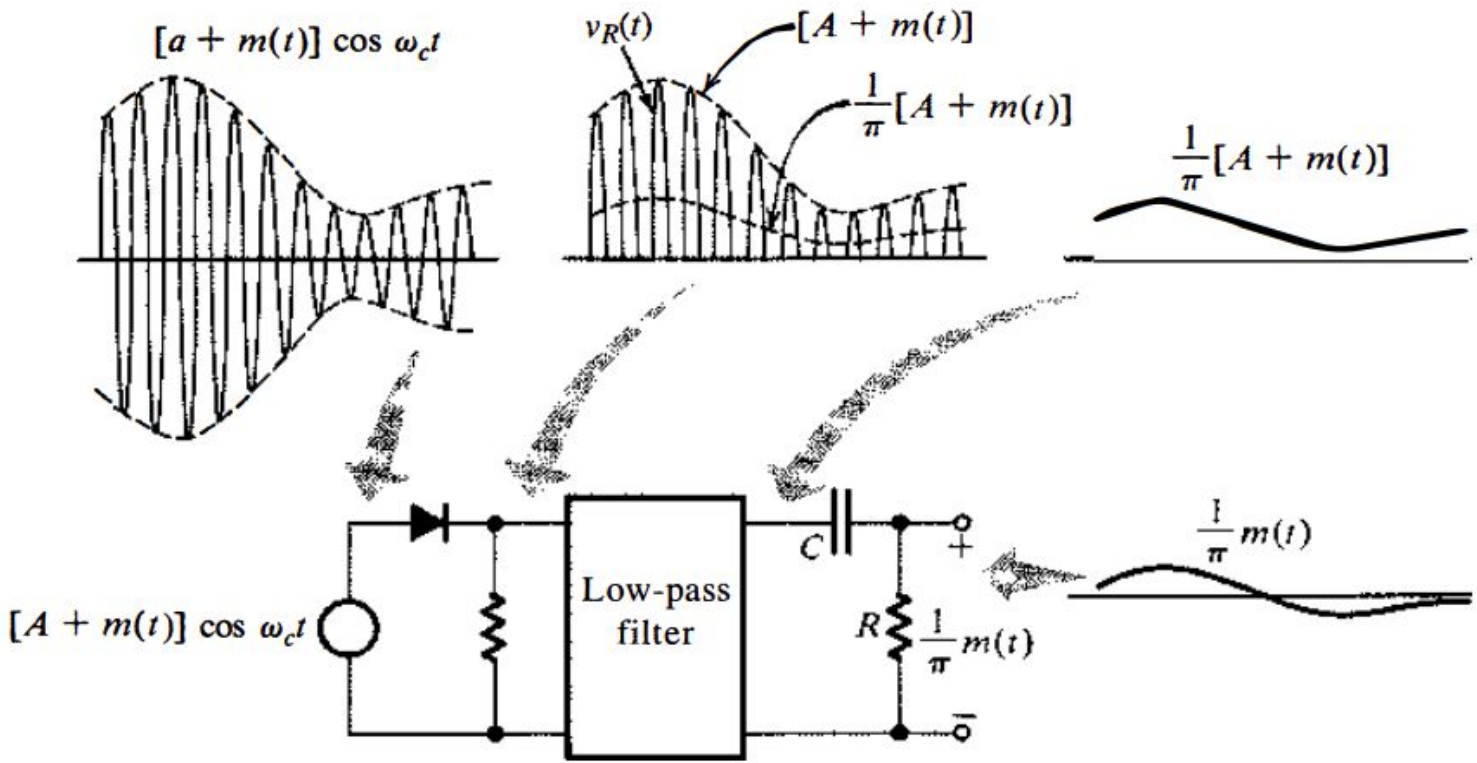

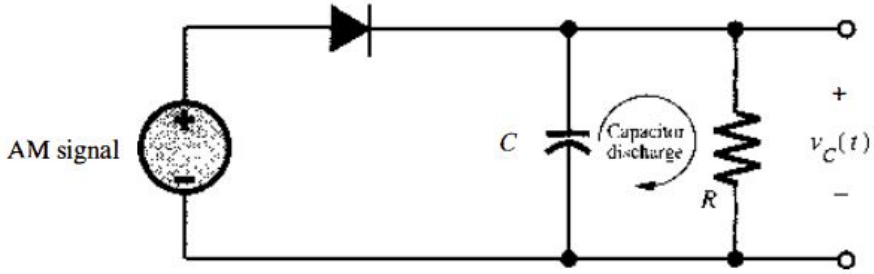
AM signal
C
Capacitor discharge
R
+
$v_C(t)$
−

(a)

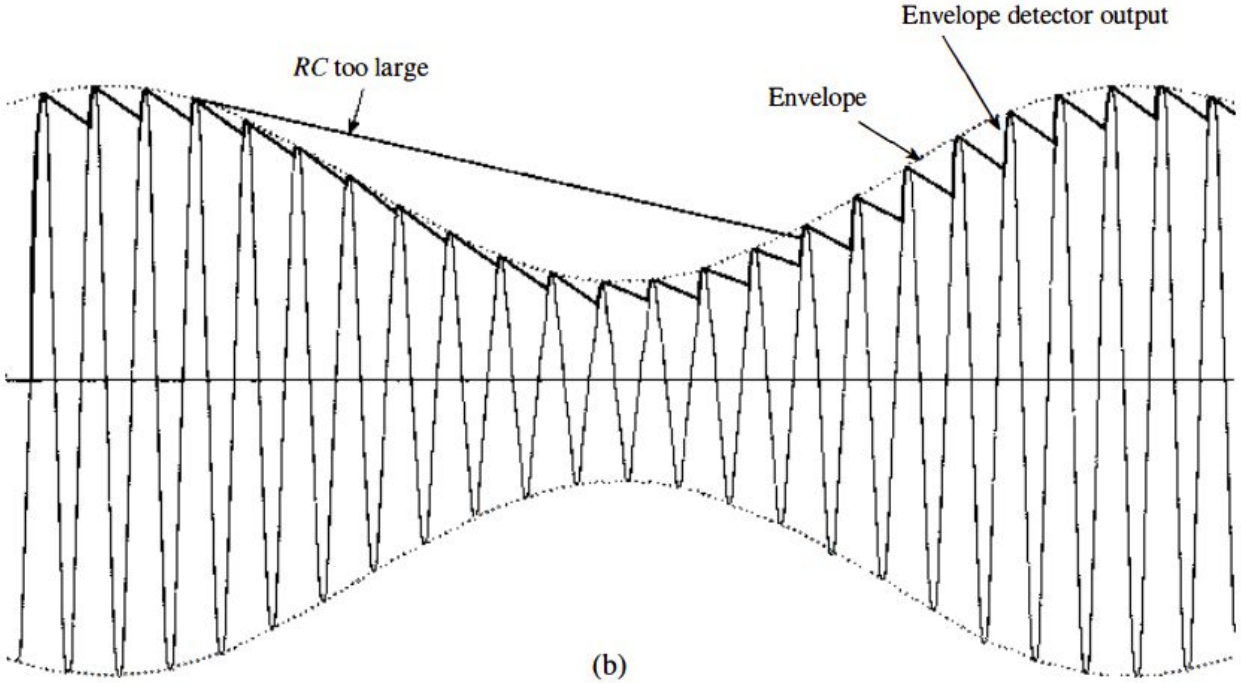
Envelope detector output
RC too large
Envelope

(b)

Outline

- Introduction to Modulation
- Double Sideband Suppressed Carrier Amplitude Modulation (DSB-SC)
- Modulators
- Demodulators and Amplitude Modulation
- **Single Sideband Modulation (SSB)**
- Quadrature Amplitude Modulation (QAM)
- Vestigial Sideband (VSB)
- Frequency Division Multiplexing (FDM)
- Phase Locked Loop (PLL)

Hilbert Transform

We now introduce for later use a new tool known as the **Hilbert transform**. We use $x_h(t)$ and $\mathcal{H}\{x(t)\}$ to denote the Hilbert transform of signal $x(t)$

$$x_h(t) = \mathcal{H}\{x(t)\} = \frac{1}{\pi}\int_{-\infty}^{\infty} \frac{x(\alpha)}{t-\alpha}\, d\alpha \tag{4.15}$$

Observe that the right-hand side of Eq. (4.15) has the form of a convolution

$$x(t) * \frac{1}{\pi t}$$

Now, application of the duality property to pair 12 of Table 3.1 yields $1/\pi t \Longleftrightarrow -j\,\mathrm{sgn}\,(f)$. Hence, application of the time convolution property to the convolution (of Eq. (4.15) yields

$$X_h(f) = -jX(f)\ \mathrm{sgn}\ (f) \tag{4.16}$$

From Eq. (4.16), it follows that if $m(t)$ passes through a transfer function $H(f) = -j\ \mathrm{sgn}\ (f)$, then the output is $m_h(t)$, the Hilbert transform of $m(t)$. Because

$$H(f) = -j\ \mathrm{sgn}\ (f) \tag{4.17}$$

$$= \begin{cases} -j = 1 \cdot e^{-j\pi/2} & f > 0 \\ j = 1 \cdot e^{j\pi/2} & f < 0 \end{cases} \tag{4.18}$$

Bandwidth-Efficient Amplitude Modulations

- DSB-SC requires double bandwidth, where there are redundant informations.
- To mitigate there are two schemes:
  - SSB
  - QAM

Single Sideband (SSB)

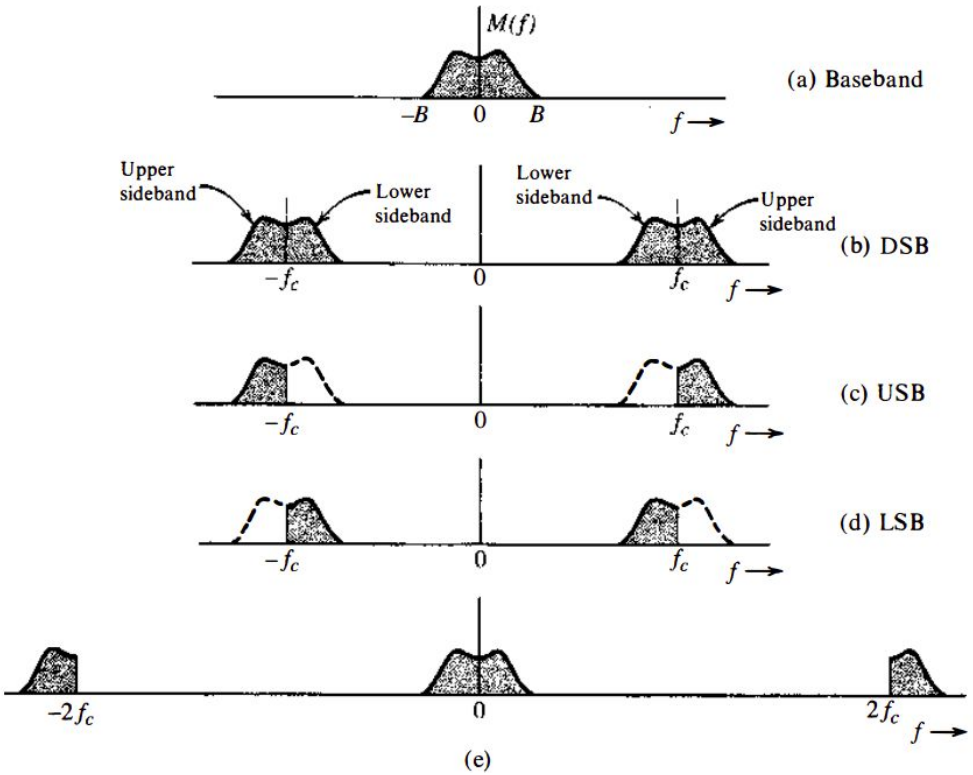

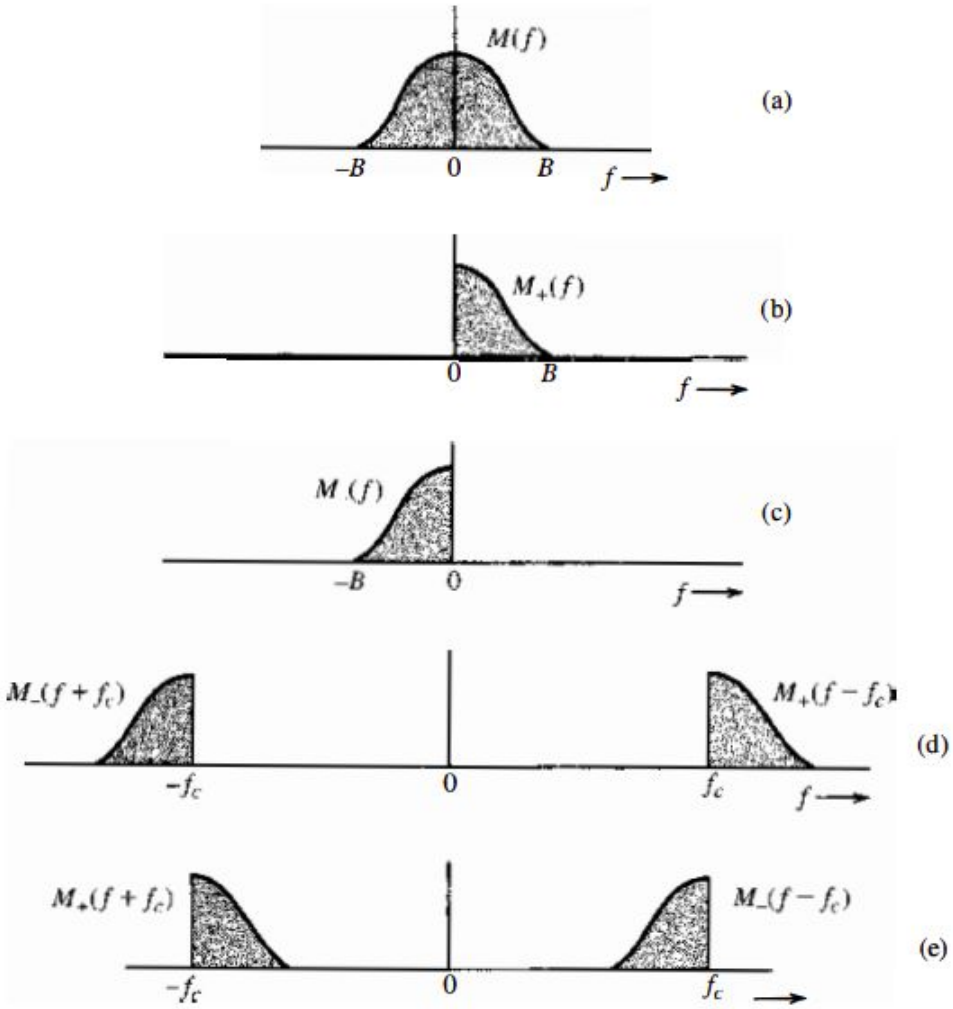
M(f)
(a)
−B
0
B
f
M+(f)
(b)
0
B
f
M (f)
(c)
−B
0
f
M−(f + fc)
M+(f − fc)
(d)
−fc
0
fc
f
M+(f + fc)
M−(f − fc)
(e)
−fc
0
fc

SSB Analysis - Frequency Domain

Figure 4.15a shows the message spectrum $M(f)$. Figure 4.15b shows its right half $M_+(f)$, and Fig. 4.15c shows its left half $M_-(f)$. From Fig. 4.15b and c, we observe that

$$M_+(f) = M(f) \cdot u(f) = M(f)\frac{1}{2}[1 + \text{sgn}(f)] = \frac{1}{2}[M(f) + jM_h(f)] \tag{4.19a}$$

$$M_-(f) = M(f)u(-f) = M(f)\frac{1}{2}[1 - \text{sgn}(f)] = \frac{1}{2}[M(f) - jM_h(f)] \tag{4.19b}$$

We can now express the SSB signal in terms of $m(t)$ and $m_h(t)$. From Fig. 4.15d it is clear that the USB spectrum $\Phi_{\text{USB}}(f)$ can be expressed as

$$\begin{aligned}\Phi_{\text{USB}}(f) &= M_+(f - f_c) + M_-(f + f_c) \\ &= \frac{1}{2}[M(f - f_c) + M(f + f_c)] - \frac{1}{2j}[M(f - f_c) - M(f + f_c)]\end{aligned}$$

SSB Analysis - Time Domain

From the frequency-shifting property, the inverse transform of this equation yields

$$\varphi_{\mathrm{USB}}(t) = m(t)\cos\ \omega_c t - m_h(t)\sin\ \omega_c t \tag{4.20a}$$

Similarly, we can show that

$$\varphi_{\mathrm{LSB}}(t) = m(t)\cos\ \omega_c t + m_h(t)\sin\ \omega_c t \tag{4.20b}$$

Hence, a general SSB signal $\varphi_{\mathrm{SSB}}(t)$ can be expressed as

$$\varphi_{\mathrm{SSB}}(t) = m(t)\cos\ \omega_c t \mp m_h(t)\sin \omega_c t \tag{4.20c}$$

SSB Demodulation

$$
\begin{aligned}
\varphi_{\mathrm{SSB}}(t)\cos\ \omega_c t &= [m(t)\cos\ \omega_c t \mp m_h(t)\sin\omega_c t]\,2\cos\ \omega_c t \\
&= m(t)[1+\cos\ 2\omega_c t] \mp m_h(t)\sin\ 2\omega_c t \\
&= m(t) + \underbrace{[m(t)\cos\ 2\omega_c t \mp m_h(t)\sin\ 2\omega_c t]}_{\text{SSB-SC signal with carrier } 2\omega_c}
\end{aligned}
$$

Example

Tone Modulation: SSB

Find $\varphi_{SSB}(t)$ for a simple case of a tone modulation, that is, when the modulating signal is a sinusoid $m(t) = \cos \omega_m t$. Also demonstrate the coherent demodulation of this SSB signal.

SSB Modulation

3 methods

- **Phase Shift Method** - next slide
- **Selective Filtering Method** - use bandpass filter to cutoff one sideband
- **Weaver Method** - two phase, in first phase move to a temp frequence, after filtering, move to actual frequency

Phase Shift Method

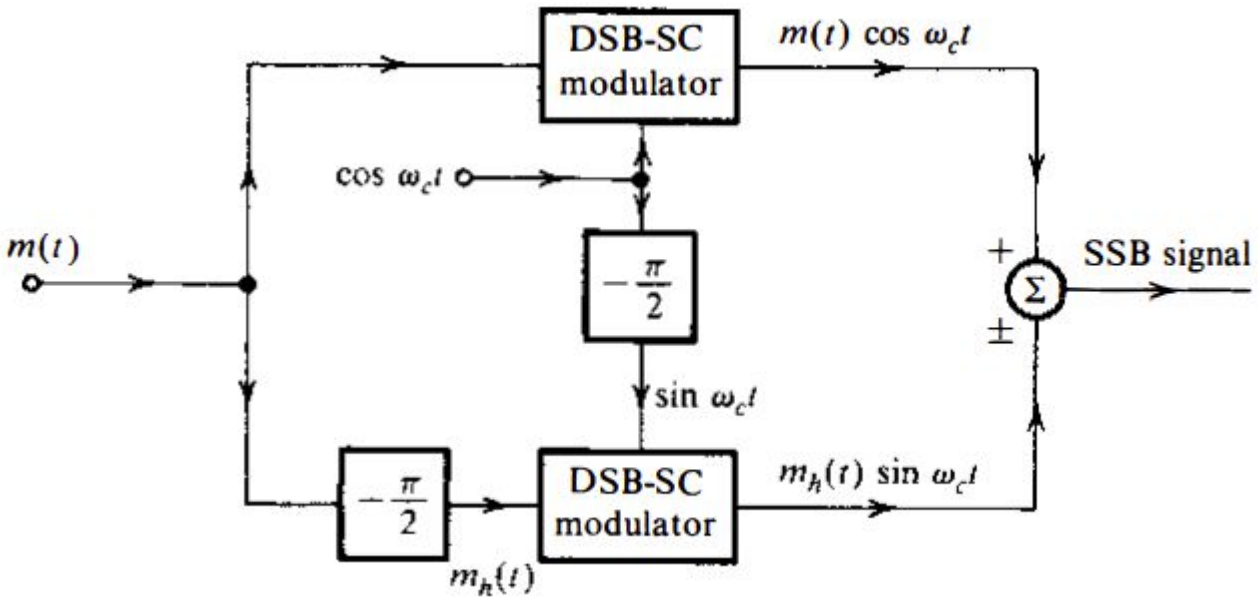

SSB + C

$$\varphi_{\text{SSB+C}} = [A + m(t)]\cos\ \omega_c t + m_h(t)\sin\ \omega_c t$$
$$= E(t)\cos\ \ (\omega_c t + \theta) \tag{4.21}$$

where $E(t)$, the envelope of $\varphi_{\text{SSB+C}}$, is given by [see Eq. (3.41a)]

$$E(t) = \{[A + m(t)]^2 + m_h^2(t)\}^{1/2}$$
$$= A\left[1 + \frac{2m(t)}{A} + \frac{m^2(t)}{A^2} + \frac{m_h^2(t)}{A^2}\right]^{1/2}$$

If $A \gg |m(t)|$, then in general* $A \gg |m_h(t)|$, and the terms $m^2(t)/A^2$ and $m_h^2(t)/A^2$ can be ignored. Thus,

$$E(t) \simeq A\left[1 + \frac{2m(t)}{A}\right]^{1/2}$$

Using Taylor series expansion and discarding higher order terms [because $m(t)/A \ll 1$], we get

$$E(t) \simeq A\left[1 + \frac{m(t)}{A}\right]$$
$$= A + m(t)$$

Quadrature Amplitude Modulation (QAM)

- SSB-SC signals are difficult to generate accurately
- QAM provides alternative to SSB
- QAM operates by transmitting two DSB signals using carriers of the same frequency but in phase quadrature

Outline

- Introduction to Modulation
- Double Sideband Suppressed Carrier Amplitude Modulation (DSB-SC)
- Modulators
- Demodulators and Amplitude Modulation
- Single Sideband Modulation (SSB)
- **Quadrature Amplitude Modulation (QAM)**
- Vestigial Sideband (VSB)
- Frequency Division Multiplexing (FDM)
- Phase Locked Loop (PLL)

QAM

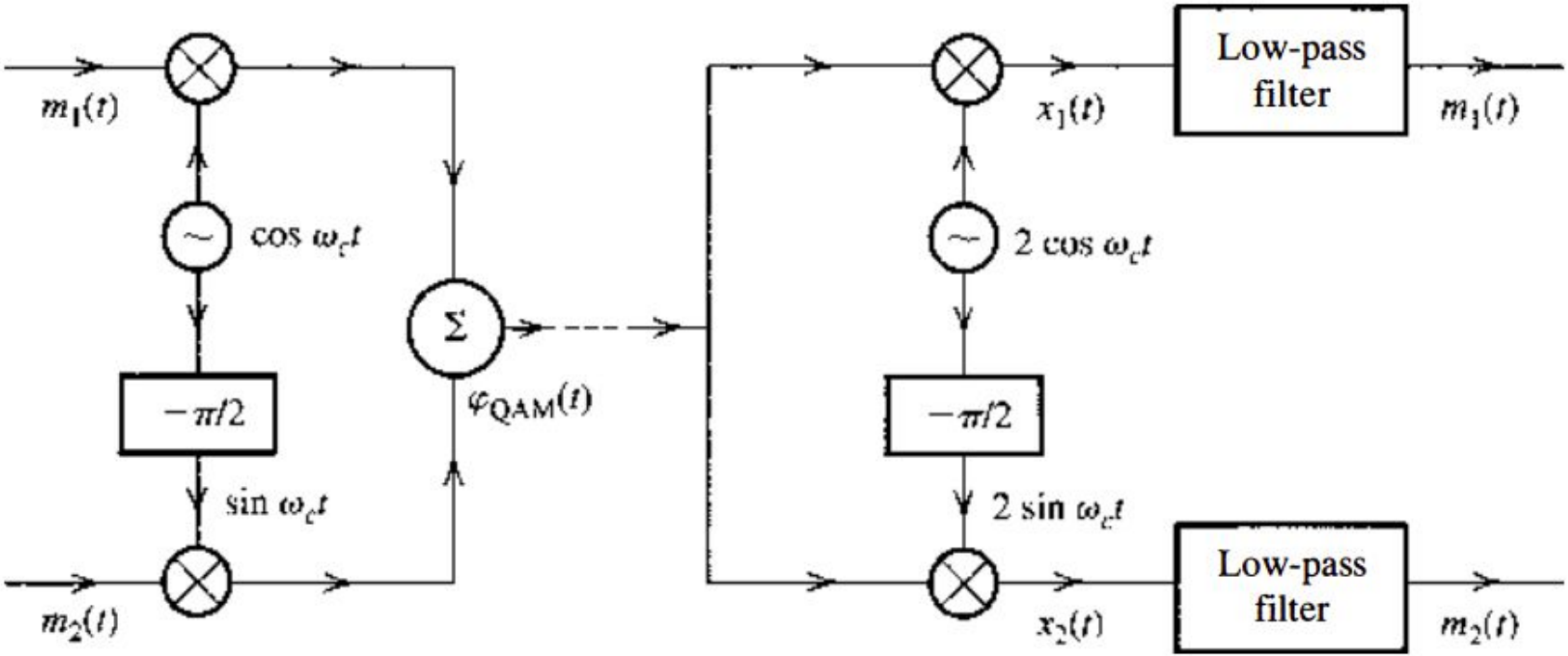
$m_1(t)$
$\cos \omega_c t$
$-\pi/2$
$\sin \omega_c t$
$m_2(t)$
Σ
$\varphi_{QAM}(t)$
$x_1(t)$
Low-pass filter
$m_1(t)$
$2 \cos \omega_c t$
$-\pi/2$
$2 \sin \omega_c t$
$x_2(t)$
Low-pass filter
$m_2(t)$

QAM

- There are two channels, in phase and quadrature
- QAM demodulation must be totally synchronous. Otherwise **Co-channel interference** occurs

$$x_1(t) = 2[m_1(t)\cos\ \omega_c t + m_2(t)\sin\ \omega_c t]\cos(\omega_c t + \theta)$$
$$= m_1(t)\cos\theta - m_2(t)\sin\ \theta + m_1(t)\cos(2\omega_c t + \theta) + m_2(t)\sin(2\omega_c t + \theta)$$

Outline

- Introduction to Modulation
- Double Sideband Suppressed Carrier Amplitude Modulation (DSB-SC)
- Modulators
- Demodulators and Amplitude Modulation
- Single Sideband Modulation (SSB)
- Quadrature Amplitude Modulation (QAM)
- **Vestigial Sideband (VSB)**
- Frequency Division Multiplexing (FDM)
- Phase Locked Loop (PLL)

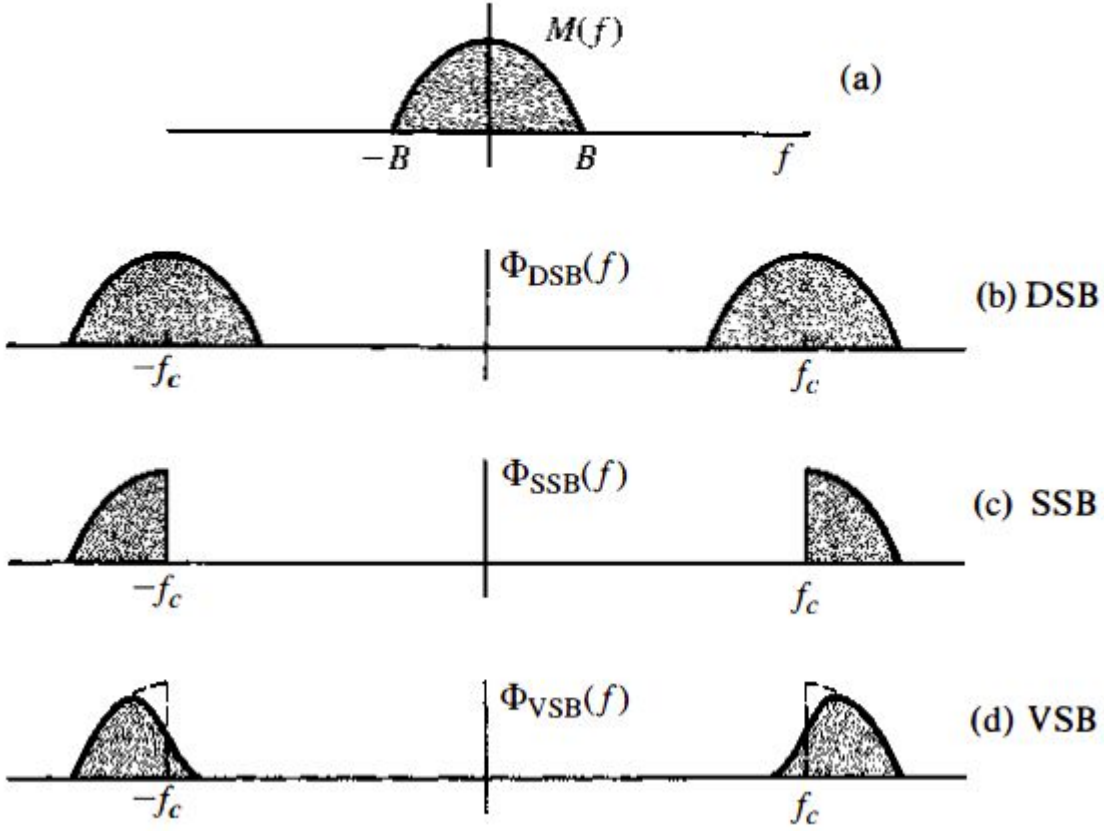
M(f)
(a)
−B
B
f
Φ_DSB(f)
(b) DSB
−f_c
f_c
Φ_SSB(f)
(c) SSB
−f_c
f_c
Φ_VSB(f)
(d) VSB
−f_c
f_c

$$\Phi_{VSB}(f) = [M(f + f_c) + M(f - f_c)]H_i(f) \tag{4.23}$$

We require that $m(t)$ be recoverable from $\varphi_{VSB}(t)$ by using synchronous demodulation at the receiver. This is done by multiplying the incoming VSB signal $\varphi_{VSB}(t)$ by $2\cos\ \omega_c t$. The product $e(t)$ is given by

$$e(t) = 2\varphi_{VSB}(t)\cos\ \omega_c t \Longleftrightarrow [\Phi_{VSB}(f + f_c) + \Phi_{VSB}(f - f_c)]$$

The signal $e(t)$ is further passed through the low-pass equalizer filter of the transfer function $H_o(f)$. The output of the equalizer filter is required to be $m(t)$. Hence, the output signal spectrum is given by

$$M(f) = [\Phi_{VSB}(f + f_c) + \Phi_{VSB}(f - f_c)]H_o(f)$$

Substituting Eq. (4.23) into this equation and eliminating the spectra at $\pm 4f_c$ [suppressed by a low-pass filter $H_o(f)$], we obtain

$$M(f) = M(f)[H_i(f + f_c) + H_i(f - f_c)]H_o(f) \tag{4.24}$$

Hence

$$H_o(f) = \frac{1}{H_i(f + f_c) + H_i(f - f_c)} \qquad |f| \le B \tag{4.25}$$

$$H_i(f + f_c) + H_i(f - f_c) = 1 \qquad |f| \le B \tag{4.26}$$

The output filter is just a simple low-pass filter with transfer function:

$$H_o(f) = 1 \qquad |f| \le B$$

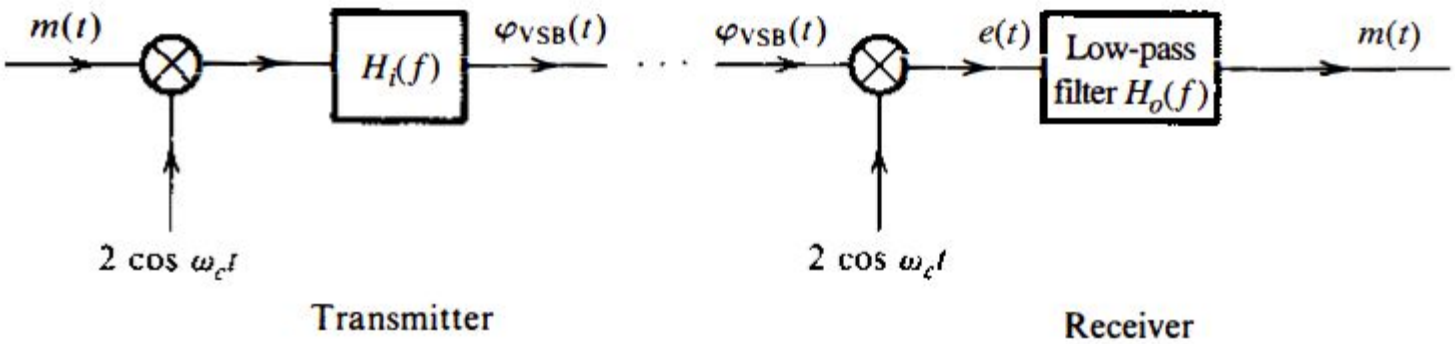

$$F(f) = j[1 - 2H_i(f - f_c)] = -j[1 - 2H_i(f + f_c)] \qquad |f| \le B$$

Defining a new (complex) low-pass signal as

$$m_v(t) \iff M_v(f) = F(f)M(f)$$

we can rewrite the VSB signal as

$$\Phi_{\mathrm{VSB}}(f) = \frac{M(f - f_c) + M(f + f_c)}{2} + \frac{M_v(f - f_c) - M_v(f + f_c)}{2j} \tag{4.27a}$$

$$\iff$$

$$\varphi_{\mathrm{VSB}}(t) = m(t)\cos 2\pi f_c t + m_v(t)\sin 2\pi f_c t \tag{4.27b}$$

Outline

- Introduction to Modulation
- Double Sideband Suppressed Carrier Amplitude Modulation (DSB-SC)
- Modulators
- Demodulators and Amplitude Modulation
- Single Sideband Modulation (SSB)
- Quadrature Amplitude Modulation (QAM)
- Vestigial Sideband (VSB)
- **Frequency Division Multiplexing (FDM)**
- Phase Locked Loop (PLL)

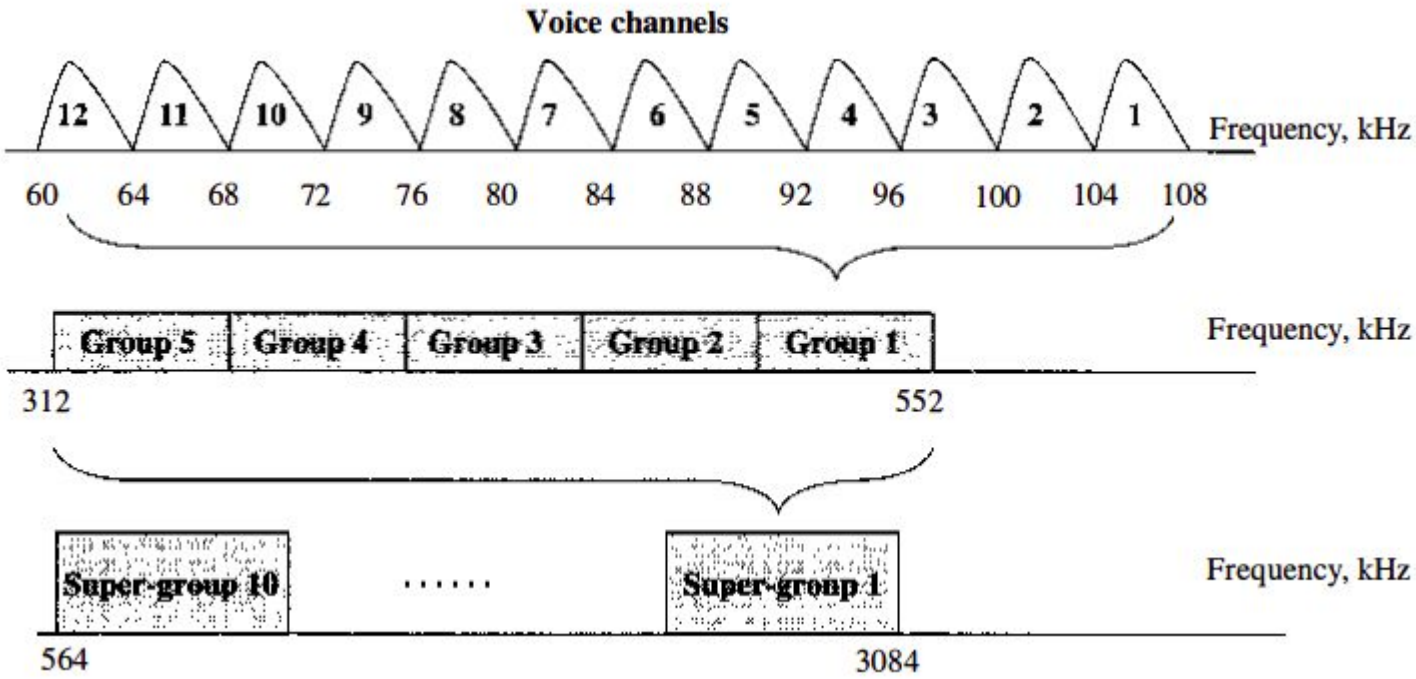
Voice channels
12
11
10
9
8
7
6
5
4
3
2
1
Frequency, kHz
60
64
68
72
76
80
84
88
92
96
100
104
108
Group 5
Group 4
Group 3
Group 2
Group 1
Frequency, kHz
312
552
Super-group 10
.....
Super-group 1
Frequency, kHz
564
3084

Outline

- Introduction to Modulation
- Double Sideband Suppressed Carrier Amplitude Modulation (DSB-SC)
- Modulators
- Demodulators and Amplitude Modulation
- Single Sideband Modulation (SSB)
- Quadrature Amplitude Modulation (QAM)
- Vestigial Sideband (VSB)
- Frequency Division Multiplexing (FDM)
- **Phase Locked Loop (PLL)**

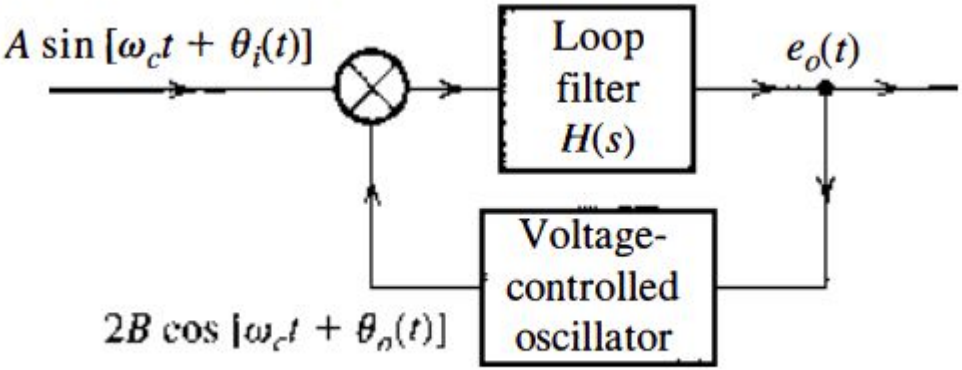
$A \sin[\omega_c t + \theta_i(t)]$
Loop filter $H(s)$
$e_o(t)$
Voltage-controlled oscillator
$2B \cos[\omega_c t + \theta_o(t)]$

(a)

Signal-Squaring Method

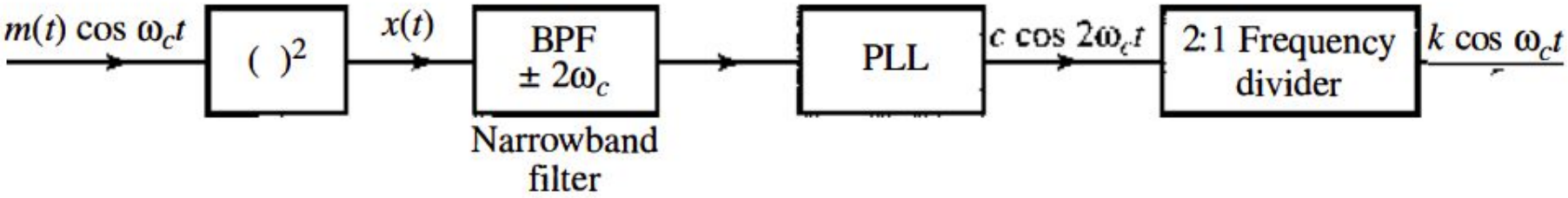

Costas Loop (Not included)

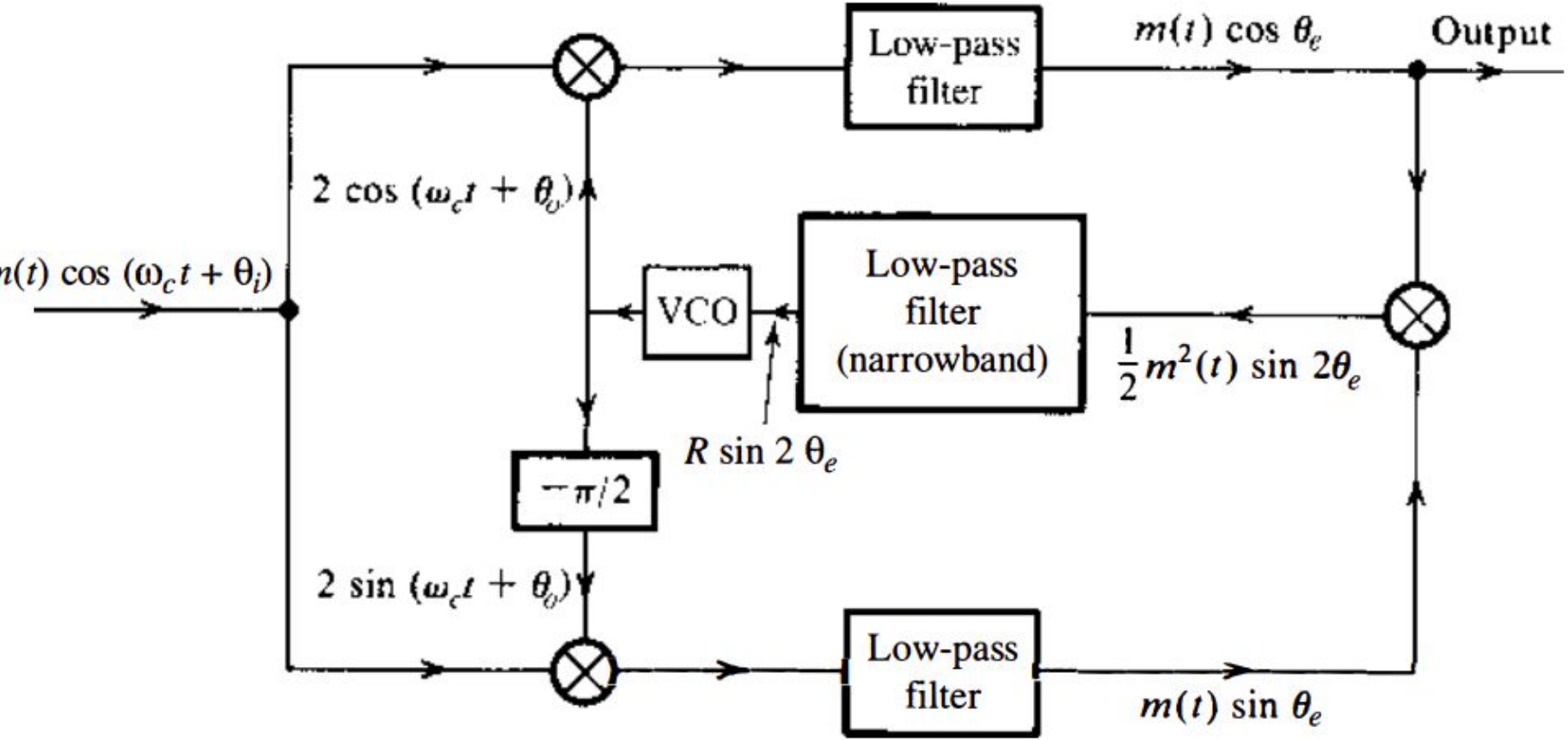

Thank You